0 601 933 303
Stand } ~~97-06~~
Issue } 99-08-18

Fig./Abb. 1

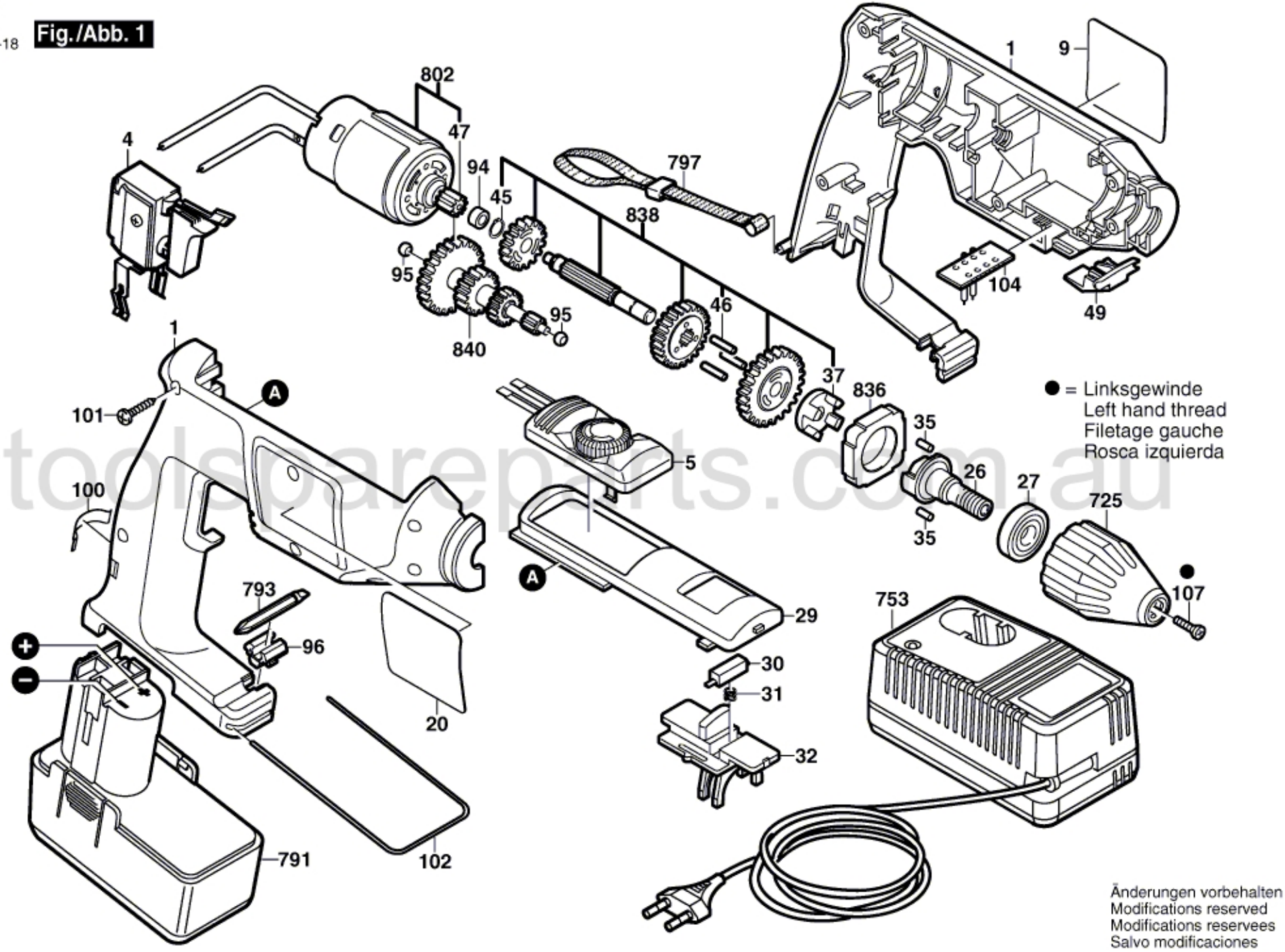

toolspareparts.com.au

Änderungen vorbehalten
Modifications reserved
Modifications reservees
Salvo modificaciones